SIMRAD®

NSO® 4

Installation manual

English

www.simrad-yachting.com

Scan to save a copy

Copyright

©2026 Navico Group. All Rights Reserved. Navico Group is a division of Brunswick Corporation.

Trademarks

®Reg. U.S. Pat. & Tm. Off, and ™ common law marks. Visit www.navico.com/intellectual-property to review the global trademark rights and accreditations for Navico Group and other entities.

- Navico® is a trademark of Navico Group.
- Simrad® is a trademark of Kongsberg Maritime AS, licensed to Navico Group.
- CZone® is a trademark of Navico Group.
- NSO® is a trademark of Navico Group.
- OP™is a trademark of Navico Group.
- ABYC® is a trademark of The American Boat & Yacht Council.
- ExFAT® is a trademark of Microsoft Corporation.
- FAT® 32 is a trademark of Microsoft Corporation.
- NMEA® and NMEA 2000® are trademarks of the National Marine Electronics Association.
- NTFS® is a trademark of Microsoft Corporation.
- SD®, microSD®, SDHC®, and SDXC® are trademarks of SD-3C, LLC.
- Wi-Fi® is a trademark of Wi-Fi Alliance.

Warranty

This product's warranty is supplied as a separate document.

Safety, disclaimer and compliance

This product's safety, disclaimer and compliance statements are supplied as a separate document.

Internet usage

Some features in this product may require an internet connection to download or upload data. If you use a mobile/cellular connection or a pay-per-MB plan, your service provider may charge you for data transferred. If you are unsure, contact your internet service provider for rates and restrictions.

More information

Document version: 001

For the latest version of this document in supported languages, and other related documentation, visit **www.simrad-yachting.com/downloads/nso-4**.

Contact us

For product support and service information, visit **www.simrad-yachting.com/contact-us**.

CONTENTS

4 In the box

5 Front controls

6 Connectors
7 Memory card reader

8 Installation
8 General mounting guidelines
9 Panel mount
9 Rear mount
12 Flush mount
13 Minimum display spacing

14 Wiring
14 Wiring guidelines
14 Check connectors

15 Power and other controls
15 Power cable connector details
15 Power connection
17 External alarm
17 USB
17 Video input
18 Video output
18 Ethernet

21 NMEA 2000® planning and installation

24 Supported data
24 NMEA 2000® PGN (receive)
25 NMEA 2000® PGN (transmit)

26 Optional Accessories

27 Maintenance
27 Suncover
27 Cleaning instructions

28 Dimensions
28 16" unit
29 22" unit
30 24" unit

31 Technical specifications

IN THE BOX

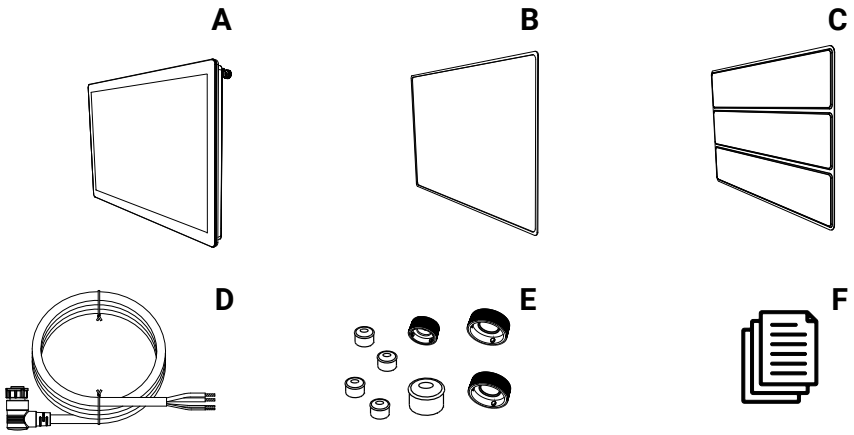

A Display unit
- 6x rear mount screw assembly pre-assembled (22” and 24” units)
- 4x rear mount screw assembly pre-assembled (16” units)

B Dash gasket
C Suncover
D Right-angle power cable 3 m (9.8 ft)
E Dust cap kit -
- 4x dust caps for M12 connectors
- 2x dust caps for video in/out ports
- 1x dust cap for NMEA 2000® port
- 1x dust cap for USB port

F Documentation pack

⚠ **WARNING:** The suncover has powerful magnets which help it stay on the screen. The suncover is not intended to be used when the vessel is in motion or in tow. It may become detached at high speeds. Always remove the suncover before traveling. Do not place the suncover near a compass or device which may be sensitive to magnetic interference.

FRONT CONTROLS

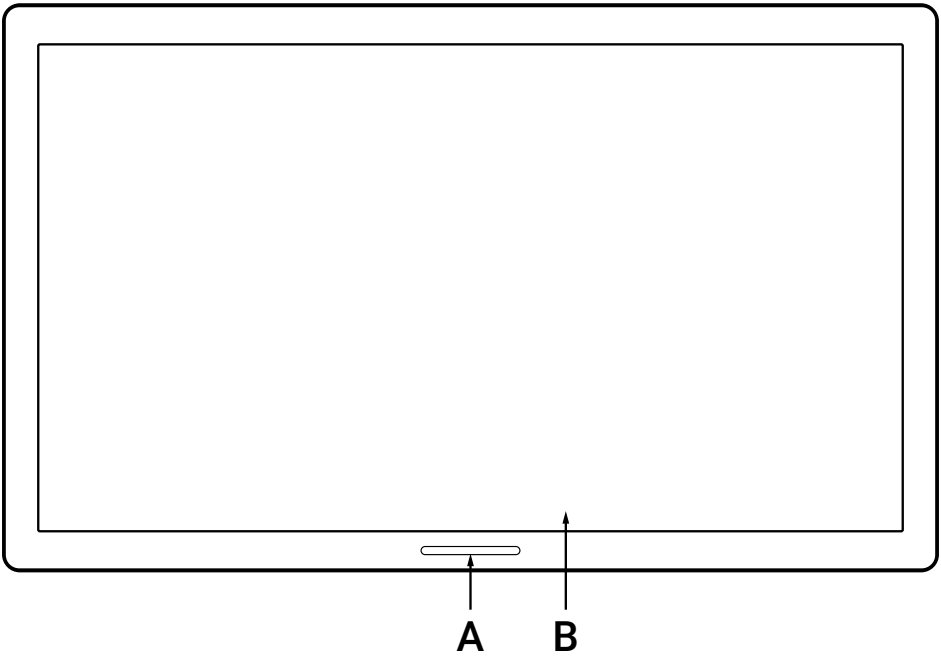

A Power key
- Tap once to turn the unit ON.
- Tap and hold to turn the unit OFF.
- Once powered on, tap once to display the activity bar
- With the activity bar visible, tap once to display the quick access menu.

B Touchscreen

CONNECTORS

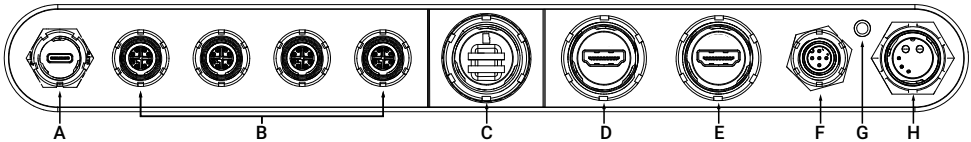

A USB
B Gigabit Ethernet (X-Coded M12 connector)
C Dual microSD® slot
D Video in
E Video out
F NMEA® 2000 (Micro-C connector)
G Earth-ground connection point (M4 x 0.7)
H 12 V / 24 V Power and other controls (4-pin connector)

➔ *Notes:*

- *Video in, out, USB, and microSD® connector covers should remain fitted when the connectors are not in use.*
- *To help minimize interference, corrosion, and electrolysis; use a conducting wire to connect the Earth-ground connection point (**G**) to a point on the hull that is in electrical contact with the water. This will ground the unit and network via a bleed path, allowing excess charge to dissipate safely.*

Memory card reader

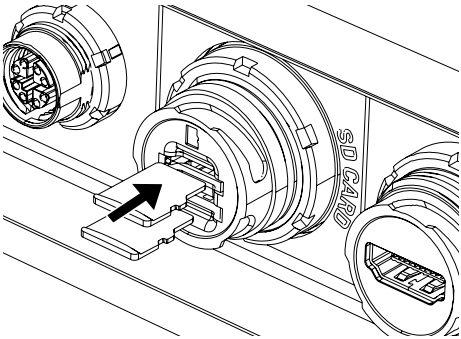

There are two microSD® card ports on the rear, microSD® cards can be used to:

- Provide detailed charts
- Update software
- Transfer user data (waypoints, routes, tracks, and screenshots).
- Record sonar logs and store screen shots.

➔ *Notes:*

- *If a microSD® card and USB storage device are both inserted, by default, data and screenshots are saved to the USB storage device.*
- *Do not download, transfer or copy files to a chart card as it can damage chart information on the card.*
- *MicroSD® cards (SDHC®, SDXC®) up to a maximum of 256 GB are supported in FAT® 32, ExFAT® or NTFS® file system.*
- *Always shut the protective cover securely after inserting or removing a microSD® card to keep the slot watertight.*

INSTALLATION

General mounting guidelines

Choose a mounting location that will not expose the unit to conditions that exceed the technical specifications.

> ⚠ **WARNING:** Do not install the unit in a hazardous/flammable atmosphere. Always wear appropriate eye wear, ear protection and dust mask when drilling, cutting, or sanding. Remember to check the reverse side of all surfaces whenever drilling or cutting.

Mounting location

This product generates heat which must be considered when choosing the mounting location.

Ensure the selected area allows for:

- Cable routing, cable connection and cable support.
- Connection and use of USB storage devices.

Do also consider:

- The free space around the unit to avoid overheating.
- The mounting surface's structure and strength, with regard to the weight of the equipment.
- Any mounting surface vibration that might damage the equipment.
- Hidden electrical wires that might be damaged when drilling holes.

Suncover

The suncover is not intended to be used when the vessel is in motion or in tow. It may become detached at high speeds. Always remove the suncover before traveling.

Ventilation

Inadequate ventilation and subsequent overheating of the unit may cause reduced performance and reduced service life. Ventilation is recommended behind all units that are not bracket mounted.

Ensure cables do not obstruct the airflow.

Examples of enclosure ventilation options, in order of preference, are:

- Positive pressure air from the vessel's air conditioning system.
- Positive pressure air from local cooling fans (fan required at input, fan optional at outlet).
- Passive airflow from air vents.

Electrical and radio frequency interference

This unit conforms with the appropriate Electromagnetic Compatibility (EMC) regulations. To ensure the EMC performance is not compromised, the following guidelines apply:

- Use a separate battery for the vessel engine.
- Minimum 1 m (3 ft) between the device, the device's cables and any transmitting equipment or cables with radio signals.
- Minimum 2 m (7 ft) between the device, the device's cables and the SSB radio.
- More than 2 m (7 ft) between the device, the device's cables and the radar beam.

Compass safe distance

The unit outputs electromagnetic interference that can cause inaccurate readings on a nearby compass. To prevent compass inaccuracy, the unit must be mounted far enough away so the interference does not affect compass readings. For minimum compass safe distance, refer to **Technical specifications** on page **31.**

⚠ **WARNING:** Check compass readings before installation and again with the unit powered ON and temporarily placed at the mounting location. If readings change, choose a location farther from the compass.

Wi-Fi®

It is important to test the Wi-Fi® performance at your chosen location before you install the unit.

It is important to keep your country setting up to date. Go to **Settings > Preferences > Country** to change the unit's country setting.

Construction material (steel, aluminum or carbon) and heavy structures will affect Wi-Fi® performance.

The following guidelines apply:

- Select a location with a clear, direct line of sight between Wi-Fi® connected units.
- Keep the distance between Wi-Fi® units as short as possible.
- Mount the unit at least 1 m (3 ft) away from equipment that might generate interference.

Touchscreen

Touchscreen performance can be affected by the location of the unit. Avoid locations where the screen is exposed to direct sunlight or prolonged rainfall.

Panel mount

Refer to the mounting template for illustrated panel mounting instructions.

Rear mount

Your display unit includes pre-installed rear mounting screw assemblies. The quantity of these assemblies may vary depending on the display size.

Rear mount screw assembly

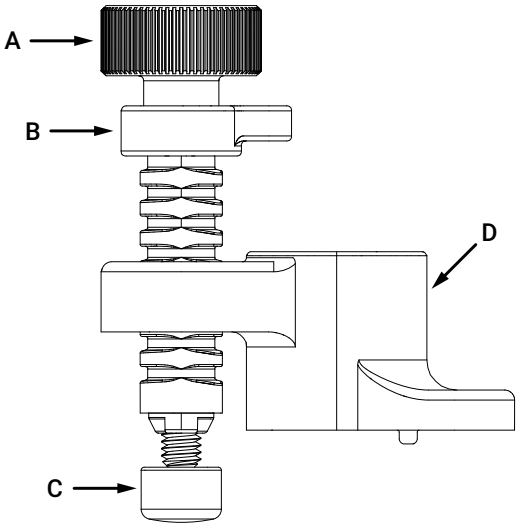

A Micro adjustment screw
B Macro adjuster (do not remove from mount arm or disassemble)
C Rubber foot
D Mount arm (covered by assembly cap, do not remove or disassemble)

➔ *Note: In the above illustration, rear mount screw assembly cap is not shown.*

Mounting process

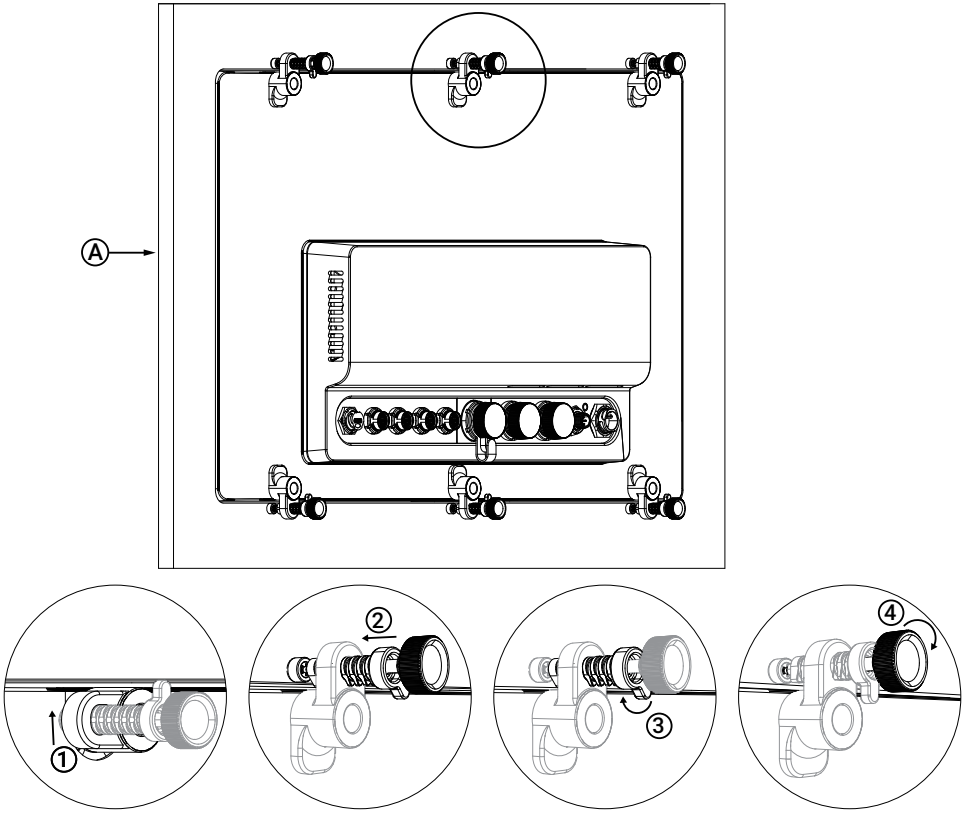

The above image illustrates a dashboard (**A**) and display from behind. There are either four or six rear mount screw assemblies, your MFD may have four screw assemblies.

Apply the provided gasket to the gasket channel on the inside lip of the display unit. Then place the unit into the dash cutout:

1. Check mount arm clearance. If needed, loosen macro and micro adjustment screws so the mount arms clear the dash.
2. Turn all mount arms clockwise.
3. Slide all macro adjustment screws towards the dash until it clicks into place.
4. Turn all macro adjustment screws clockwise to lock in place.
5. Turn all micro adjustment screws clockwise for a snug fit, tighten evenly. Do not over tighten.

⚠ **WARNING:** Hand-tighten only! Do not use any tools to tighten the screws. Using excessive force may damage the back side of the display unit.

➔ ***Note:*** *In the above illustration, rear mount screw assembly caps are not shown.*

Flush mount

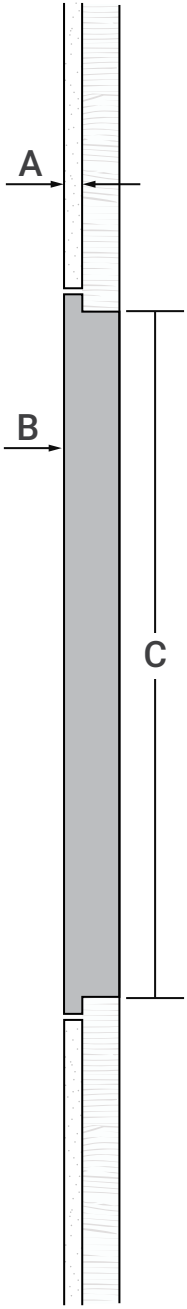

Cross section

A Top panel thickness 7 mm (0.27 in)
B Display unit
C Display unit cut out area

Minimum display spacing

Your display units can be mounted alongside or above each other. Check the minimum spacing requirements below.

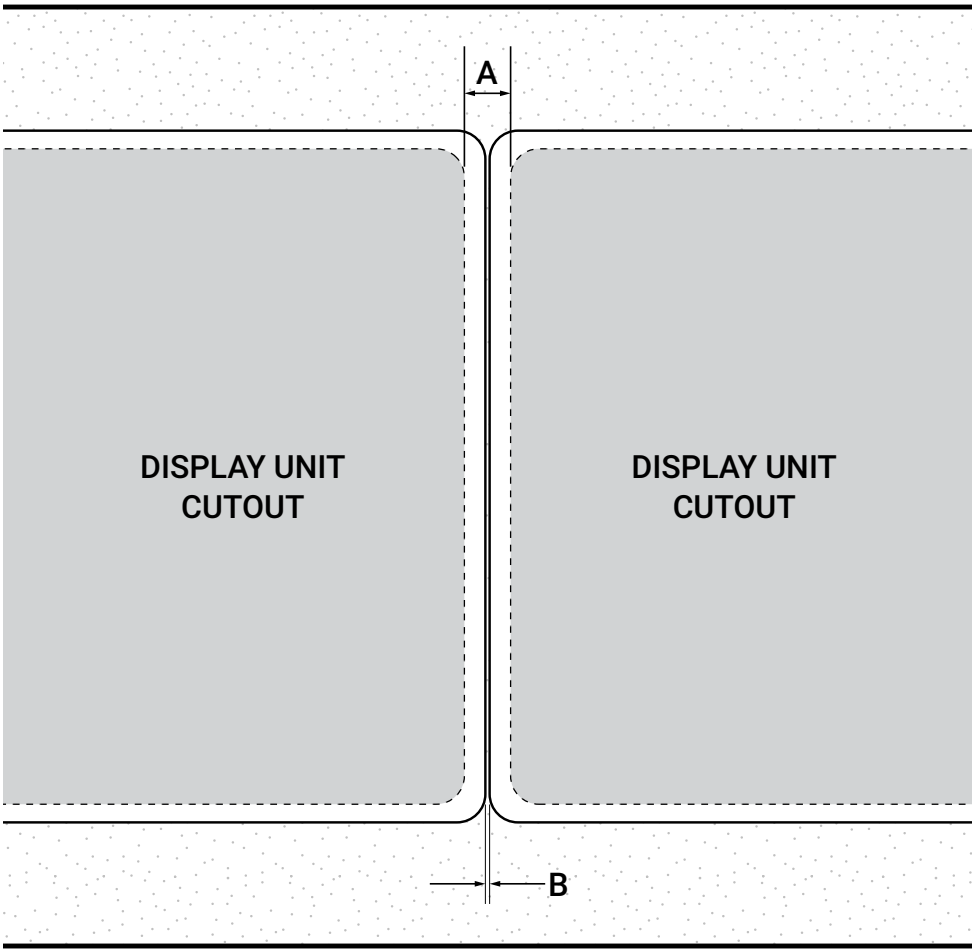

	16" display unit	22" and 24" display unit
A	16.3 mm (0.64 in) minimum width between cutouts.	16.85 mm (0.66 in) minimum width between cutouts.
B	1.5 mm (0.05 in) minimum gap between display glass.	

➔ ***Note:*** *Use the above measurements to ensure the minimum width requirements are met to maintain dash material strength.*

➔ ***Note:*** *Refer to display unit mounting template for cutout dimensions.*

WIRING

Wiring guidelines

Unless otherwise stated, only use the supplied cable/s. If you need to use a non-supplied cable, ensure it is the correct quality, length and gauge for its intended purpose.

Don't:

- Make sharp bends in the cables.
- Run cables in a way that allows water to flow down into the connectors.
- Run the data cables adjacent to radar, transmitter, or large/high current carrying cables or high frequency signal cables.
- Run cables so they interfere with mechanical systems.
- Run cables over sharp edges or burrs.

Do:

- Make drip and service loops.
- Ensure a minimum bend radius of 100 mm (3 15/16 in) where possible.

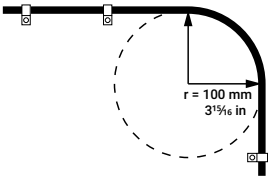

- Use cable-ties on all cables to keep them secure.
- Solder/crimp and insulate all wiring connections if extending or shortening the cables. Extending cables should be done with suitable crimp connectors or solder and heat shrink. Keep joins as high as possible to minimize the possibility of water immersion.
- Leave room adjacent to connectors to ease the plugging and unplugging of cables.
- Follow any grounding advice provided in the product documentation.

⚠ **WARNING:** Before starting the installation, turn the electrical power off. If power is left on or turned on during the installation, fire, electrical shock, or other serious injury may occur. Be sure that the voltage of the power supply is compatible with the unit.

⚠ **WARNING:** The positive supply wire (red) should always be connected to (+) DC with a fuse or a circuit breaker (closest available to fuse rating). For the recommended fuse rating, refer to the technical specifications section of this document.

Check connectors

Push the connector plugs into the connector. If the connector plugs are equipped with a lock or a position key, ensure that it is in the correct position.

POWER AND OTHER CONTROLS

The power connector is used for power, power control, and an external alarm.

Power cable connector details

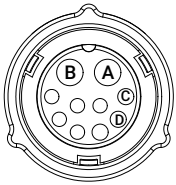

A DC positive
B DC negative
C External alarm
D Remote power On/Off

Power connection

The unit is designed to be powered by 12 or 24 V DC.

It is protected against reverse polarity, under voltage and over voltage (for a limited duration).

A fuse or circuit breaker should be fitted to the positive supply. Refer to the technical specifications section of this document for fuse rating.

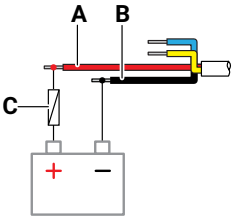

A 12 or 24 V DC (red)
B DC negative (black)
C Fuse (for the recommended rating, refer to the technical specifications section of this document)

Power control connection

The yellow wire in the power cable can be used to control how the unit is turned on and off.

Power controlled by power key

The unit will turn on/off when the power key on the unit is pressed. Leave the yellow power control wire disconnected and tape or heat-shrink the end to prevent a short circuit.

Power control by supply power

The unit will turn on/off without using the power key when power is applied/removed. Connect the yellow wire to the red wire after the fuse.

➔ *Note: The unit cannot be powered down by the power key, but can be put in to standby mode (the screen backlight turns off).*

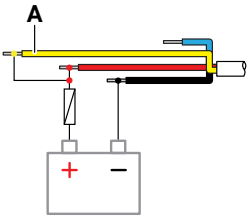

A Power control (yellow)

Power controlled by ignition

The unit will turn on when the ignition is turned on to start engines.

➔ *Note: Engine start batteries and house batteries should have a common ground connection.*

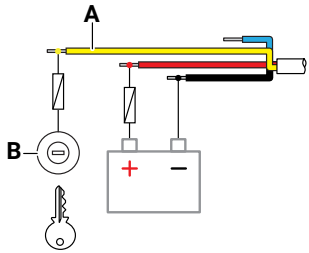

A Power control (yellow)
B Ignition switch

Power controlled by power control bus

The yellow power control wire can either be an input that will turn the unit on when power is applied, or an output that turns on other devices when the unit is powered on. It can be configured to control the power state of displays and compatible devices by going to: **Settings > Boat network > Devices > This Device > MFD > Show Details > Power control.**

The unit can be set to be a primary or secondary power control. If a unit is configured as primary and turned on by the power key, it will output voltage on the power bus. This will power on other primary units and secondary units. If a unit is set to secondary power control, it cannot be powered down using its own power key while a primary power control unit is turned on. If all primary power control units are off, secondary units can be turned on and off using their own power key. However, this will not turn on any other units connected to the power bus.

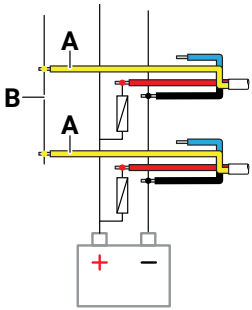

A Power control wire (yellow)
B Power control bus

External alarm

Connect the blue wire in the power cable to an external buzzer or siren to trigger an external alarm.

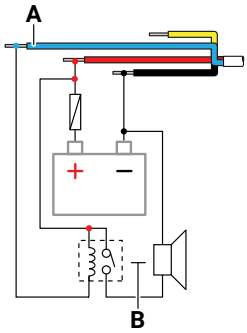

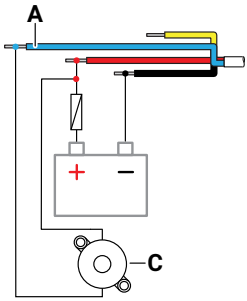

A External alarm output (blue)
B Siren and relay
C Buzzer
➔ *Note: Use a relay for sirens that draw more than 1 A.*

USB

The USB port can be used for USB touch or to connect:

- Storage device
- Card reader
- Audio out

See **Optional Accessories** on page **26** for specific part numbers.

➔ *Notes:*

- *USB devices should be standard PC-compatible hardware.*
- *USB touch is turned ON/OFF in the **Video Input** app.*

Video input

The unit should be turned off prior to connecting or disconnecting a video cable.

➔ *Note: The unit supports HDCP-protected content playback but does not support output to networked displays.*

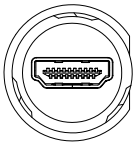

Video input cable requirements

Video input signal may be compromised on long cable runs. Only use Navico Group cables or other high-quality video cables. Third-party cables should be tested before installation.

➔ *Note: On cable runs over 10 m (32 ft), you may need to add a video amplifier or use video-to-Cat 6 adapters.*

Video output

Connect external displays to mirror local display content.

➔ *Notes:*

- *The receiving unit should be turned off prior to connecting or disconnecting a video cable.*
- *The unit does not transmit video over USB, Ethernet, or NMEA® 2000.*

Ethernet

The Ethernet port(s) can be used for data transfer and synchronization of user-created data. No special setup is required for establishing an Ethernet network.

The unit supports network speeds up to 1 Gbps on the X-coded M12 Gigabit Ethernet (GbE) connector. This enables high-bandwidth applications and more advanced sensors and devices. The X-coded M12 GbE connector is compatible with yellow 5-pin Ethernet devices via an optional adapter, but the X-coded M12 GbE connector will transmit data at a lower rate.

➔ ***Note:*** *Only one X-coded M12 GbE to yellow Ethernet adapter may be used between devices.*

Ethernet connector (X-Coded M12, GbE)

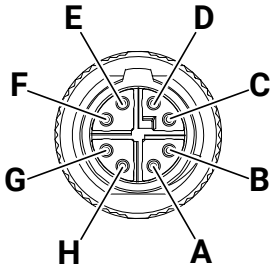

	Color	X-Coded M12, GbE	Yellow 5-pin	
A	Orange / white	DB+	RX+	Twist
B	Orange	DB-	RX-	
C	Green / white	DA+	TX+	Twist
D	Green	DA-	TX-	
E	Brown / White	DD+	Not Used	Twist
F	Brown	DD-	Not Used	
G	Blue / White	DC-	Not Used	Twist
H	Blue	DC+	Not Used	

X-Coded M12 Gigabit Ethernet cable requirements

Only use Navico Group cables or other high-quality Cat 6 SF/FTP Ethernet cables.

Navico X-Coded M12 GbE cables have keyed connectors to prevent accidental damage to the connector pins. The unit is compatible with all standard X-coded M12 GbE connectors.

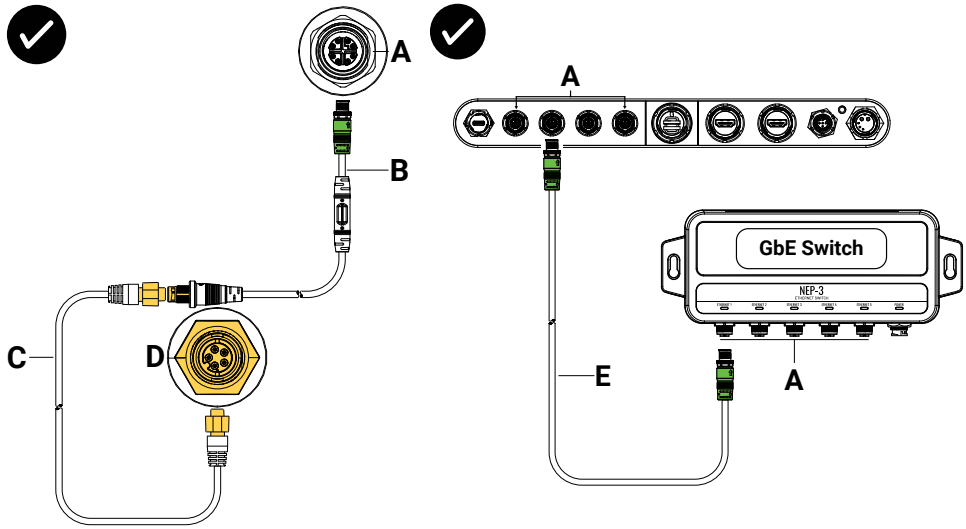

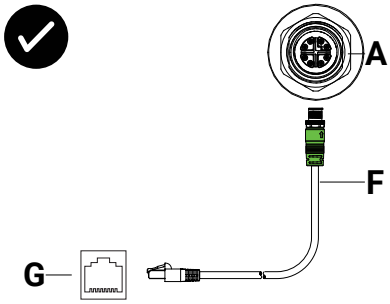

A X-Coded M12 GbE connector
B M12 GbE to yellow 5-pin Ethernet adapter
C Yellow 5-pin Ethernet cable
D Yellow 5-pin Ethernet connector
E M12 GbE cable
F M12 GbE to RJ45 Ethernet cable
G RJ45 Ethernet connector

Do not use more than one X-Coded M12 GbE to yellow 5-pin Ethernet adapter when connecting devices.

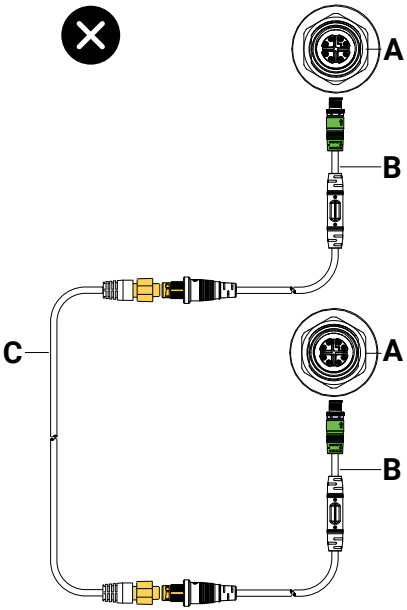

A X-Coded M12 GbE connector
B M12 GbE to yellow 5-pin adapter
C Yellow 5-pin Ethernet cable

Ethernet expansion device

Connect an Ethernet expansion device to connect to multiple network devices e.g. NEP-3, NEP-2. Additional Ethernet expansion devices can be added to provide the required number of ports.

NMEA 2000® PLANNING AND INSTALLATION

The NMEA 2000® data port allows the receiving and sharing of data, including commands and status, from various sources.

Connector details

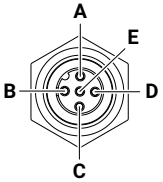

A Shield
B NET-S (12 V DC)
C NET-C (DC negative)
D NET-H
E NET-L

An NMEA 2000® network consists of a powered backbone from which drop cables connect to NMEA 2000® devices. The backbone typically runs from bow to stern within 6 m (20 ft) of the locations of the products to be connected.

The following guidelines apply:

- Supply voltage must be 12 V DC (9 – 16 V DC).
- Supply current must not exceed 3 A.
- Power source must not exceed 3% voltage drop at power insertion point on the backbone (ABYC® E-11).
- The total length of the backbone must not exceed 100 m (328 ft).
- A single drop cable has a maximum length of 6 m (20 ft). The total length of all drop cables combined must not exceed 78 m (256 ft).
- A terminator must be installed at each end of the backbone. This can be a terminator plug or a unit with a built-in terminator.

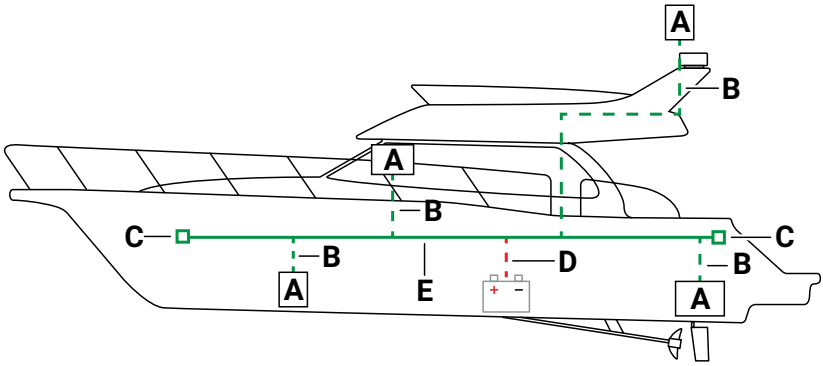

A NMEA 2000® device
B Drop cable
C Terminator
D Power supply 12 V DC
E NMEA 2000® backbone

NMEA 2000® network power

The NMEA 2000® network requires its own 12 V DC power supply, protected by a 3 A fuse.

➔ *Note: Do not connect the NMEA 2000® power cable to the engine start batteries, autopilot computer, bow thruster or other high-current devices.*

Network devices may experience communication errors if they receive less than 9.5 V DC. To ensure reliability and safe operation, use a derated battery or power supply value to calculate the network voltage drop. Check your battery or power supply manufacturer's documentation for the derating factor.

Voltage drop calculations are based on Ohm's Law.

$$V = I \times R$$

V = voltage drop estimate (**VD**)

I = total network LEN (**NL**) **× 0.1**

R = total network length in meters (**BL**) **×** cable resistance **(Z)**

$$\mathrm{VD} = (0.1 \times \mathrm{NL}) \times (\mathrm{BL} \times Z)$$

➔ *Notes:*

- LEN (Load Equivalency Number) represents the current draw of a device.
  1 LEN = 50 mA (0.050 A) (Refer to the network device manufacturer for LEN value.)
- If the cable length is measured in feet, multiply the cable length by 0.3.
- Cable resistance **(Z)** for each type of network cable:
- Lite cable = 0.057 Ω / Meter
- Medium cable = 0.015 Ω / Meter
- Heavy cable = 0.012 Ω / Meter

Sample voltage drop calculation

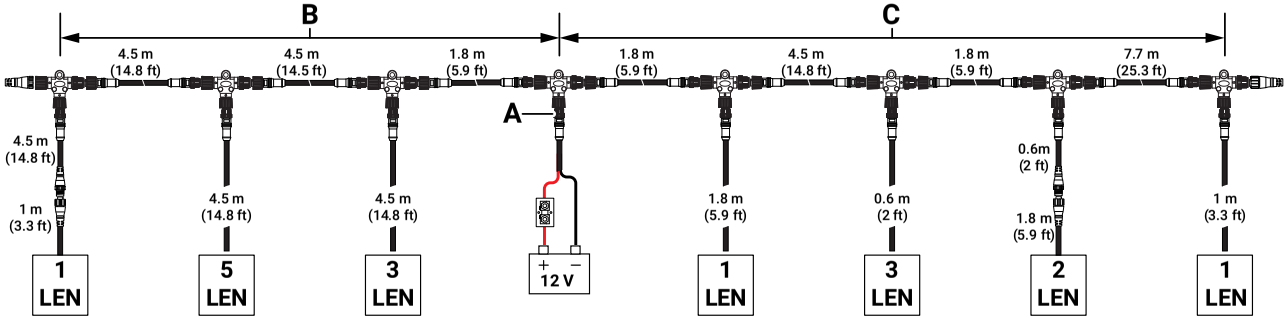

A Power insertion point
B Left branch
C Right branch

Left branch				
	Segment	1	2	3
	Backbone length	1.8 m	4.5 m	4.5 m
	Drop length	4.5 m	4.5 m	5.5 m
Device	Net load			
1	3 LEN	0.108		
2	5 LEN	0.180	0.257	
3	1 LEN	0.036	0.051	0.057
Totals	9 LEN	0.323	0.308	0.057

Voltage drop
0.688 V DC

Right branch					
	Segment	1	2	3	4
	Backbone length	1.8 m	4.5 m	1.8 m	7.7 m
	Drop length	1.8 m	0.6 m	2.4 m	1 m
Device	Net load				
1	1 LEN	0.021			
2	3 LEN	0.062	0.087		
3	2 LEN	0.041	0.058	0.048	
4	1 LEN	0.021	0.029	0.024	0.050
Totals	7 LEN	0.144	0.174	0.072	0.050

Voltage drop
0.439 V DC

Voltage drop estimation		
	Left	Right
Minimum supply voltage (derated supply)	11 V DC	11 V DC
3% loss at insertion	-0.33 V DC	-0.33 V DC
Voltage drop	-0.688 V DC	-0.439 V DC
Voltage at the end point	9.982 V DC	10.231 V DC

If the voltage at the end point is less than 9.5 V DC, you can:

- Move the power insertion point.
- Use Navico Group medium-duty NMEA 2000® cables.
- Add a CZone Network Bridge Interface (NBI) to the center of the NMEA 2000® bus, and connect power at the midpoint of each side.

SUPPORTED DATA

NMEA 2000® PGN (receive)

59392	ISO Acknowledgment
59904	ISO Request
60160	ISO Transport Protocol, Data Transfer
60416	ISO Transport Protocol, Connection M
60928	ISO Address Claim
65240	ISO Commanded Address
126208	ISO Command Group Function
126992	System Time
126996	Product Info
126998	Configuration Information
127233	Man Overboard Notification (MOB)
127237	Heading/Track Control
127245	Rudder
127250	Vessel Heading
127251	Rate of Turn
127252	Heave
127257	Attitude
127258	Magnetic Variation
127488	Engine Parameters, Rapid Update
127489	Engine Parameters, Dynamic
127490	Electric Drive Status (Dynamic)
127491	Electric Energy Storage Status (Dynamic)
127493	Transmission Parameters, Dynamic
127494	Electric Drive Information
127495	Electric Energy Storage Information
127500	Load Controller Connection State/Control
127501	Binary Status Report
127503	AC Input status
127504	AC Output Status
127505	Fluid Level
127506	DC Detailed Status
127507	Charger Status
127508	Battery Status
127509	Inverter Status
128002	Electric Drive Status (Rapid Update)
128003	Electric Energy Storage Status (Rapid Update)
128259	Speed, Water referenced
128267	Water Depth
128275	Distance Log
128780	Linear Actuator Control / Status
129025	Position, Rapid Update
129026	COG & SOG, Rapid Update
129029	GNSS Position Data
129033	Time & Date
129038	AIS Class A Position Report
129039	AIS Class B Position Report
129040	AIS Class B Extended Position Report
129041	AIS Aids to Navigation (AtoN) Report
129283	Cross Track Error
129284	Navigation Data
129539	GNSS DOPs
129540	GNSS Sats in View
129545	GNSS RAIM Output
129549	DGNSS Corrections
129551	GNSS Differential Correction Receiver Signal
129793	AIS UTC and Date Report
129794	AIS Class A Static and Voyage Related Data
129798	AIS SAR Aircraft Position Report
129799	Radio Frequency / Mode / Power
129801	AIS Addressed Safety Related Message
129802	AIS Safety Related Broadcast Message
129808	DSC Call Information
129809	AIS Class B “CS” Static Data Report, Part A
129810	AIS Class B “CS” Static Data Report, Part B
130060	Label
130074	Route and WP Service - WP List - WP Name & Position
130306	Wind Data
130310	Environmental Parameters
130311	Environmental Parameters
130312	Temperature
130313	Humidity
130314	Actual Pressure
130316	Temperature, Extended Range
130330	Lighting System Settings
130561	Lighting Zone Settings
130562	Lighting Scene Settings

130563	Lighting Device Settings
130564	Lighting Device Enumeration
130565	Lighting Color Sequences
130566	Lighting Programs
130569	Entertainment - Current File and Status
130570	Entertainment - Library Data File
130571	Entertainment - Library Data Group
130572	Entertainment - Library Data Search
130573	Entertainment - Supported Source Data
130574	Entertainment - Supported Zone Data
130576	Small Craft Status
130577	Direction Data
130578	Vessel Speed Components
130579	Entertainment - System Configuration Status
130580	Entertainment - System Configuration Status
130581	Entertainment - Zone Configuration Status
130582	Entertainment - Zone Volume Status
130583	Entertainment - Available Audio EQ Presets
130584	Entertainment - Bluetooth® Devices
130585	Entertainment - Bluetooth® Source Status

NMEA 2000® PGN (transmit)

60160	ISO Transport Protocol, Data Transfer
60416	ISO Transport Protocol, Connection M
126208	ISO Command Group Function
126464	Transmit/Receive Supported PGN List
126992	System Time
126993	Heartbeat
126996	Product Info
127237	Heading/Track Control
127250	Vessel Heading
127258	Magnetic Variation
127502	Switch Bank Control
128259	Speed, Water referenced
128267	Water Depth
128275	Distance Log
129025	Position, Rapid Update
129026	COG & SOG, Rapid Update
129029	GNSS Position Data
129283	Cross Track Error

129285	Navigation - Route/WP Information
129284	Navigation Data
129285	Route/Waypoint Data
129539	GNSS DOPs
129540	GNSS Sats in View
130074	Route and WP Service - WP List - WP Name & Position
130306	Wind Data
130310	Environmental Parameters
130311	Environmental Parameters
130312	Temperature
130577	Direction Data
130578	Vessel Speed Components

OPTIONAL ACCESSORIES

000-16516-001	OP™ 55 remote control, portrait
000-16517-001	OP™ 55 remote control, landscape
000-13892-001	MI10 external card reader
000-15939-001	NMEA0813 interface
000-16448-001	M12 GbE to yellow adapter
000-16327-001	USB to USB female adapter
000-16328-001	USB audio adapter for NSO 4
000-16329-001	USB to USB-A female adapter
000-16554-001	Power cable 4-PIN, right angle
000-16332-001	Power cable 12/24V isolated
000-16333-001	Rear mount kit NSO 4, 2PC
000-16340-001	Magnetic suncover NSO 4-16
000-16341-001	Magnetic suncover NSO 4-22
000-16342-001	Magnetic suncover NSO 4-24

For a complete list of compatible accessories, visit **www.simrad-yachting.com.**

MAINTENANCE

To ensure optimal performance and longevity of your MFD, follow these care and maintenance guidelines to help extend the service life of the display.

Suncover

Your MFD comes with a suncover included in the box.

Whenever the unit is not in use, fit the suncover to shield the display from direct sunlight and natural elements. This helps extend the service life of the display.

Cleaning instructions

Your unit's display is treated with high-quality anti-reflective and anti-fingerprint coatings. With regular, gentle cleaning, you can maintain its clarity and durability.

- After each use, wipe the unit clean and dry with a soft microfiber or cotton cloth.
- Avoid rubbing crystallized salt, sand, or dirt directly, as this may scratch the coatings.
- If needed, lightly spray with fresh water to dissolve salt residue before drying with a microfiber or soft cotton cloth.
- All cleaning should be gentle — do not apply excessive pressure to the screen.
- To clean the housing, use warm water with a small amount of mild dish soap, then wipe dry with a microfiber or soft cotton cloth.

➔ *Note:*

- *Do not use abrasive cleaning products or products containing solvents (acetone, mineral turpentine, etc.), acid, ammonia, or alcohol as they can damage the display's optical coating and plastic housing.*
- *Do not apply grease, wax, or protective chemicals to the unit or connectors. These can degrade the materials and compromise performance.*
- *Do not use a jet or high pressure wash*

DIMENSIONS

16" unit

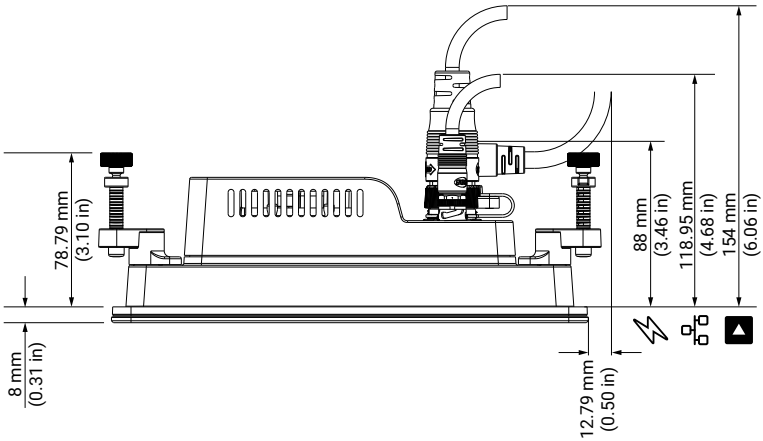

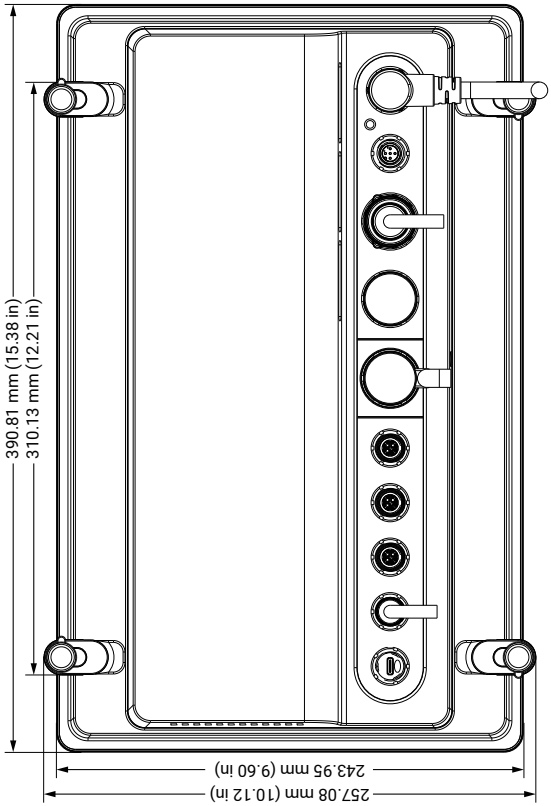

22" unit

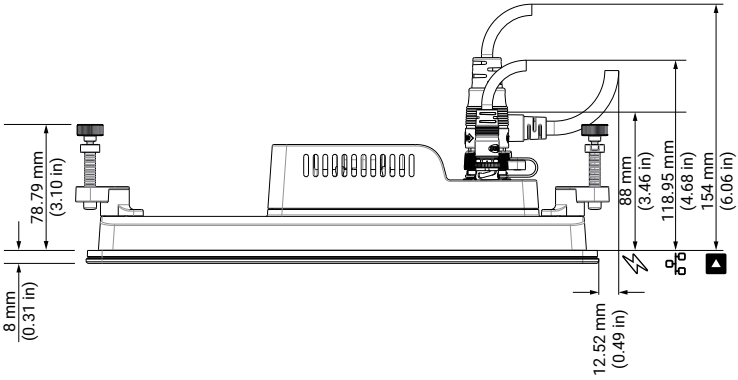
8 mm
(0.31 in)
78.79 mm
(3.10 in)
12.52 mm
(0.49 in)
88 mm
(3.46 in)
118.95 mm
(4.68 in)
154 mm
(6.06 in)

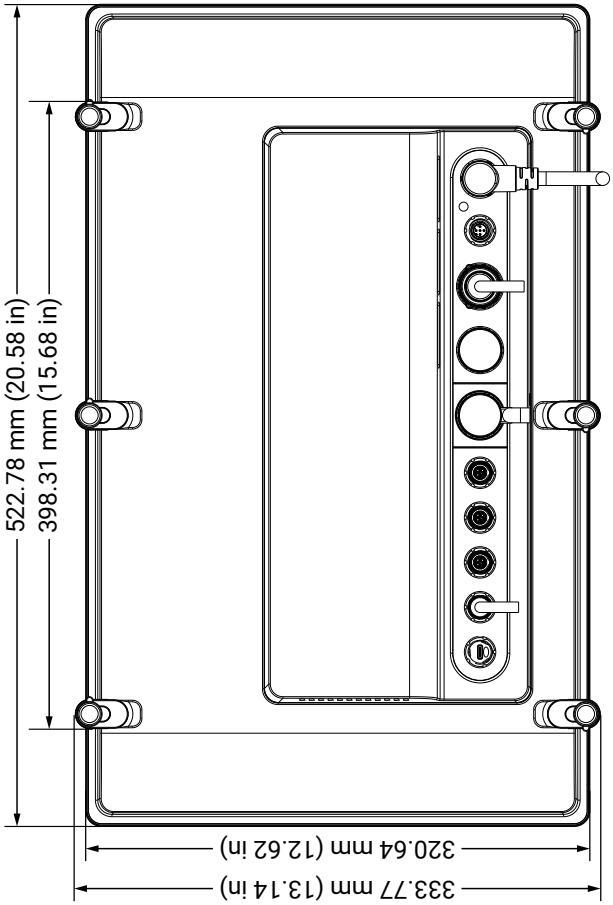
522.78 mm (20.58 in)
398.31 mm (15.68 in)
320.64 mm (12.62 in)
333.77 mm (13.14 in)

24" unit

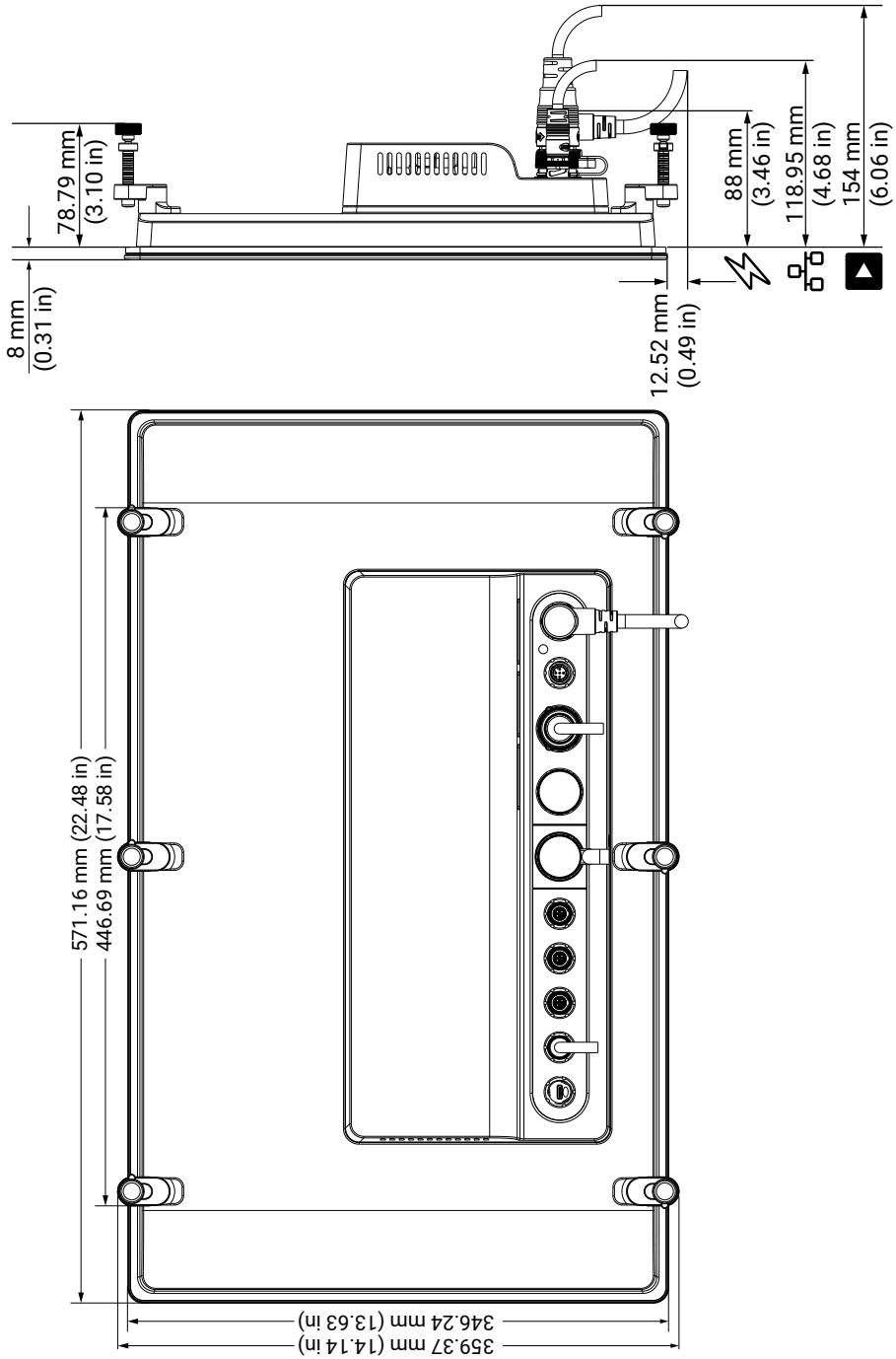
78.79 mm
(3.10 in)
8 mm
(0.31 in)
12.52 mm
(0.49 in)
88 mm
(3.46 in)
118.95 mm
(4.68 in)
154 mm
(6.06 in)
571.16 mm (22.48 in)
446.69 mm (17.58 in)
359.37 mm (14.14 in)
346.24 mm (13.63 in)

TECHNICAL SPECIFICATIONS

Display	16"	22"	24"
Resolution (px)	1920 x 1080		
Luminance	>1200 nits typ.		
Touchscreen	IPS, Full touchscreen (multi-touch)		
Viewing angles in degrees	80° top/bottom, 80° left/right		
Electrical			
Supply voltage	12/24 V DC (10.5 - 31 V DC min - max)		
Fuse rating	5 A at 12/24 V DC	7.5 A at 12 V DC 5 A at 24 V DC	7.5 A at 12 V DC 5 A at 24 V DC
Maximum power consumption	33 W	52 W	43 W
Protection	Reverse polarity and over-voltage (max 32 V)		
Environmental			
Operating temperature	-15°C to 55°C (5°F to 131°F)		
Waterproof rating	IPX6 and IPX7		
Interface and connectivity			
GPS	External GPS required		
Wi-Fi®	Wi-Fi 5 (IEEE 802.11ac-2013)		
Ethernet	4 ports (Gigabit)		
NMEA 2000®	1 port (Micro-C connector)		
Data card slot	2x (microSD®, SDHC®, SDXC®)		
USB	USB 2.0, USB 3.0, 1 port		
Video	1 port (video in), 1 port (video out)		
Physical			
Weight (Display with rear mount screws)	4.23 kg (9.32 lb)	5.76 kg (12.69 lb)	7.35 kg (16.20 lb)
Compass safe distance (Display unit only)	205 cm (80.70 in)		
Mounting type	Rear mount		

©2026 Navico Group. All Rights Reserved. Navico Group is a division of Brunswick Corporation.
®Reg. U.S. Pat. & Tm. Off, and ™ common law marks. Visit www.navico.com/intellectual-property to review the global trademark rights and accreditations for Navico Group and other entities.